C:\Users\Max\Documents\mjs\projects\2019\19057\internal\dwg\19057 CivilE.dwg
2020-07-02 12:06 pm

C:\Users\Max\Documents\mjs\projects\2019\19057\internal\dwg\19057 CivilE.dwg
2020-07-02 12:06 pm

FINAL APPROVAL BY DURHAM PLANNING BOARD.
CERTIFIED BY MICHAEL BEHRENDT, TOWN PLANNER
CERTIFIED _____
DATE _____

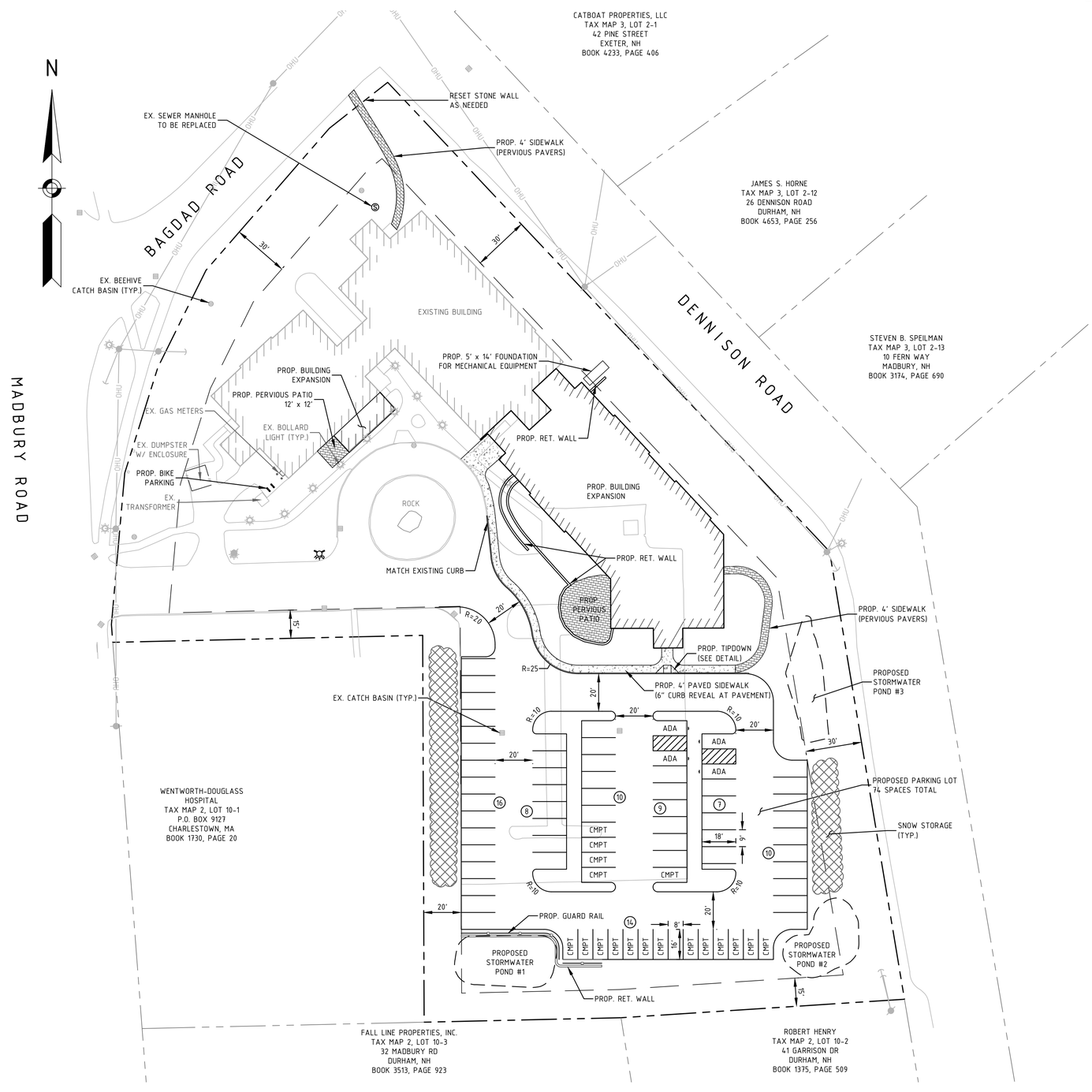

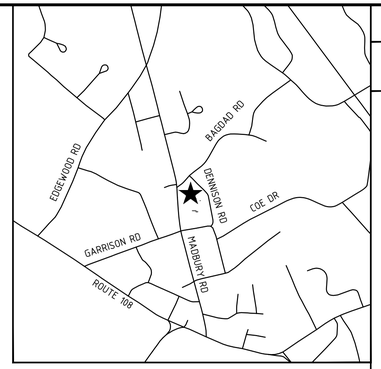

LOCUS MAP
SCALE 1:12 000

NOTES:

1. SUBJECT LOT:
   38 MADBURY ROAD
   TAX MAP 2, LOT 10-4
   S.C.R.D. BOOK 1783, PAGE 539

2. OWNER OR RECORD:
   BW2 LLC
   C/O HOUSING INITIATIVES OF NEW ENGLAND CORP.
   264 US ROUTE 1
   BUILDING 300 SUITE 2A
   SCARBOROUGH, ME 04074

3. LOT AREA: 2.74 ACRES / 119,138 SQ. FT.

4. THE PURPOSE OF THIS PLAN IS TO SHOW THE PROPOSED CHANGES TO THE SUBJECT PARCEL FOR THE EXPANSION OF THE BAGDAD WOODS SENIOR HOUSING FACILITY.

5. ZONING REQUIREMENTS:
   THE SUBJECT PARCEL IS LOCATED IN THE PROFESSIONAL OFFICE DISTRICT (PO) AND IS NOT WITHIN ANY OF THE ZONING OVERLAY DISTRICTS.

DIMENSIONAL STANDARDS FOR PO DISTRICT

MINIMUM LOT SIZE	10,000 SQ. FT.
MINIMUM LOT AREA PER DWELLING UNIT*	3,000 SQ. FT.*
MINIMUM FRONTAGE	100 FT
MINIMUM SETBACKS	
FRONT	30/30/50 FT
SIDE	15 FT
REAR	20 FT
MAXIMUM IMPERVIOUS SURFACE RATIO	50%

*PROPOSED DWELLING UNITS ARE SENIOR RESIDENTIAL AND SUBJECT TO THE SPECIAL DENSITY REQUIREMENTS IN DURHAM ZONING ORDINANCE 175-57(A).

6. THE SURVEYED PARCEL IS LOCATED WITHIN ZONE X, AREAS DETERMINED TO BE OUTSIDE THE 0.2% ANNUAL CHANCE FLOODPLAIN, AS SHOWN ON THE FEMA FLOOD INSURANCE RATE MAP (FIRM), MAP NO. 33017C0318E, MAP REVISED SEPTEMBER 30, 2015.

7. BEARINGS SHOWN ON THIS PLAN ARE BASED ON GRID NORTH, NEW HAMPSHIRE STATE PLANE, NAD83. ELEVATIONS AND CONTOURS ARE BASED ON NAVD88(GEOID12B), BASED ON GPS OBSERVATIONS TAKEN JANUARY 31, 2020. DISTANCES SHOWN ARE GROUND DISTANCES.

8. FOR MORE INFORMATION ABOUT THIS SITE PLAN, OR TO SEE THE COMPLETE PLAN SET, CONTACT THE TOWN OF DURHAM PLANNING DEPARTMENT, 8 NEWMARKET ROAD, DURHAM, NH 03824. (603) 868-8064.

9. ACCESS INTO THE SITE FOR FIRE APPARATUS SHALL BE MAINTAINED AT ALL TIMES DURING THE CONSTRUCTION PROCESS. PLEASE CONTACT THE FIRE DEPARTMENT AT 868-5531 WITH ANY QUESTIONS ABOUT ACCESS REQUIREMENTS.

10. THE PROPOSED IMPERVIOUS SURFACE RATIO IS 49.8%

PARKING CALCULATION

USE	STANDARD	REQUIRED		PROVIDED
ELDERLY HOUSING	1 SPACE/UNIT 1 SPACE/EMPLOYEE	66 UNITS 4 EMPLOYEES	66 + 4 = 70 SPACES	74 SPACES

0 30 60 100
SCALE: 1" = 30'

NO.	REVISIONS	DATE	INT.
1.	REVISED SITE PLAN AND GRADING	7/2/20	MCS
0.	INITIAL SUBMISSION TO THE DURHAM PLANNING BOARD	6/3/20	MCS

SEAL

DATE ISSUED: 6/3/20
SCALE: 1"=30'
DESIGNED BY: MCS
DRAWN BY: MCS
APPROVED BY: MJS
DWG FILE: 19057 CivilE.dwg

SITE PLAN
prepared for
BW2 LLC C/O
HOUSING INITIATIVES OF NEW ENGLAND
TAX MAP 2, LOT 10-4
BAGDAD ROAD, DURHAM, NH

MJS ENGINEERING P.C.
CIVIL • STRUCTURAL • ENVIRONMENTAL
5 Railroad St. PO Box 759
Newfields, NH 03856
Phone: (603) 659-4979, Fax: (603) 659-4427
E-mail: mjs@mjs-engineering.com

JOB: 19-057

C101

C:\Users\Max\Documents\mjs\projects\2019\19057\Internal\dwg\19057 Civil.dwg
2020-07-02 12:06 pm

FINAL APPROVAL BY DURHAM PLANNING BOARD.
CERTIFIED BY MICHAEL BEHRENDT, TOWN PLANNER
CERTIFIED _____
DATE _____

NOTES:

1. UNDERGROUND UTILITIES SHOWN HEREON ARE BASED ON OBSERVABLE PHYSICAL EVIDENCE, NO WORK WHATSOEVER SHALL BE UNDERTAKEN ON THIS SITE USING THIS PLAN TO LOCATE THE ABOVE SERVICES. CONSULT WITH THE PROPER AUTHORITIES CONCERNED WITH THE SUBJECT SERVICE LOCATIONS FOR INFORMATION REGARDING SUCH. CALL DIG-SAFE AT 1-888-DIG-SAFE.
2. GEOSYNTHETIC FILTER BAGS SHOULD BE INSTALLED IN ALL CATCH BASINS LOCATED NEAR THE WORKING AREA. SEE DETAIL FOR MOST INFORMATION.

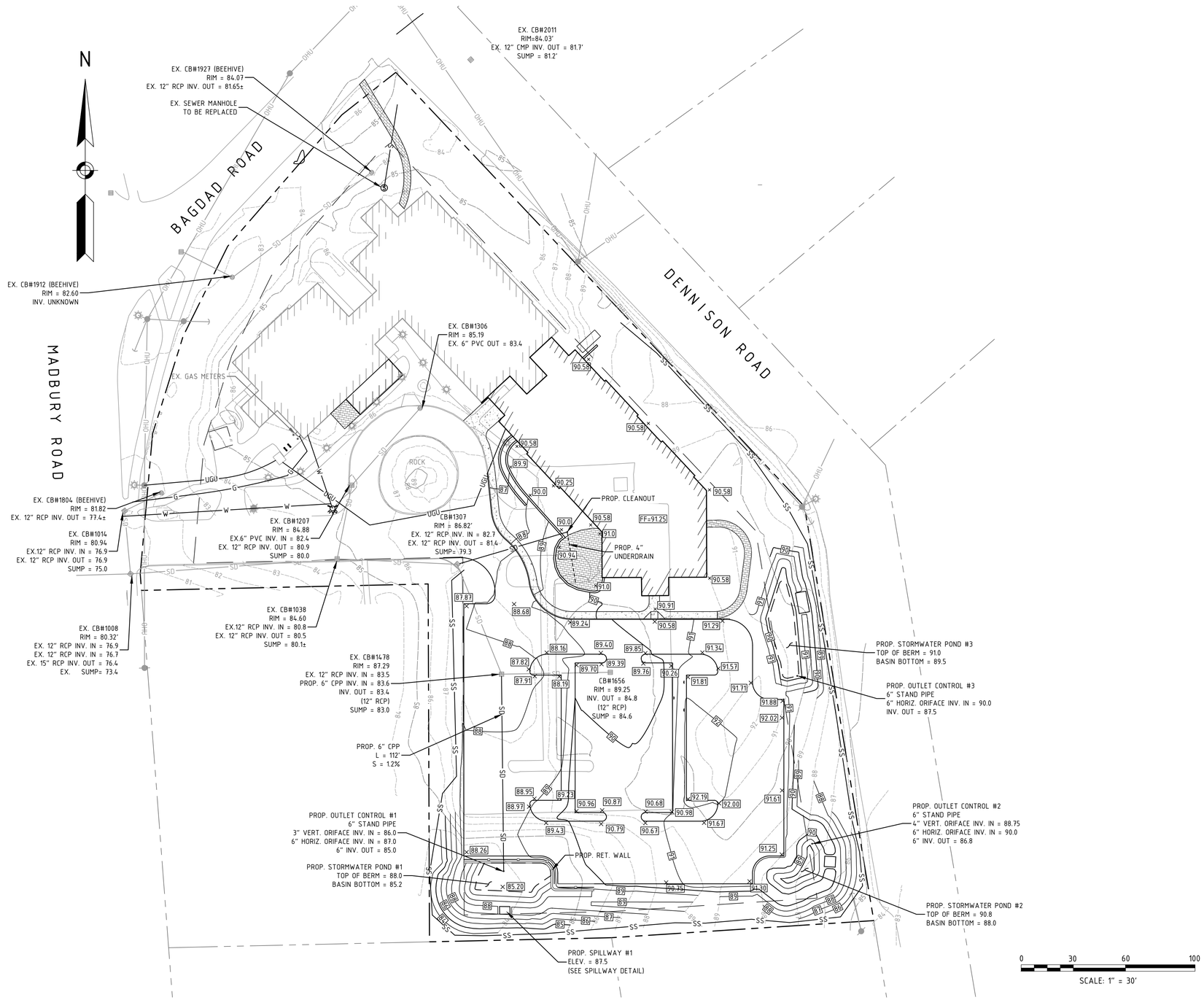

NO.	REVISIONS	DATE	INT.
1.	REVISED SITE PLAN AND GRADING	7/2/20	MCS
0.	INITIAL SUBMISSION TO THE DURHAM PLANNING BOARD	6/3/20	MCS

SEAL

DATE ISSUED: 6/3/20
SCALE: 1"=30'
DESIGNED BY: MCS
DRAWN BY: MCS
APPROVED BY: MJS
DWG FILE: 19057 Civil.dwg

UTILITIES & GRADING PLAN

prepared for
BW2 LLC C/O
HOUSING INITIATIVES OF NEW ENGLAND
TAX MAP 2, LOT 10-4
BAGDAD ROAD, DURHAM, NH

MJS ENGINEERING, P.C.
CIVIL • STRUCTURAL • ENVIRONMENTAL
5 Railroad St. P.O. Box 159
Newmarket, NH 03857
Phone: (603) 659-4979, Fax: (603) 659-4627
E-mail: mjs@mjs-engineering.com

JOB: 19-057

C102

C:\Users\Max\Documents\mjs\projects\2019\19057\internal\dwg\19-057-C103A.dwg
2020-07-02

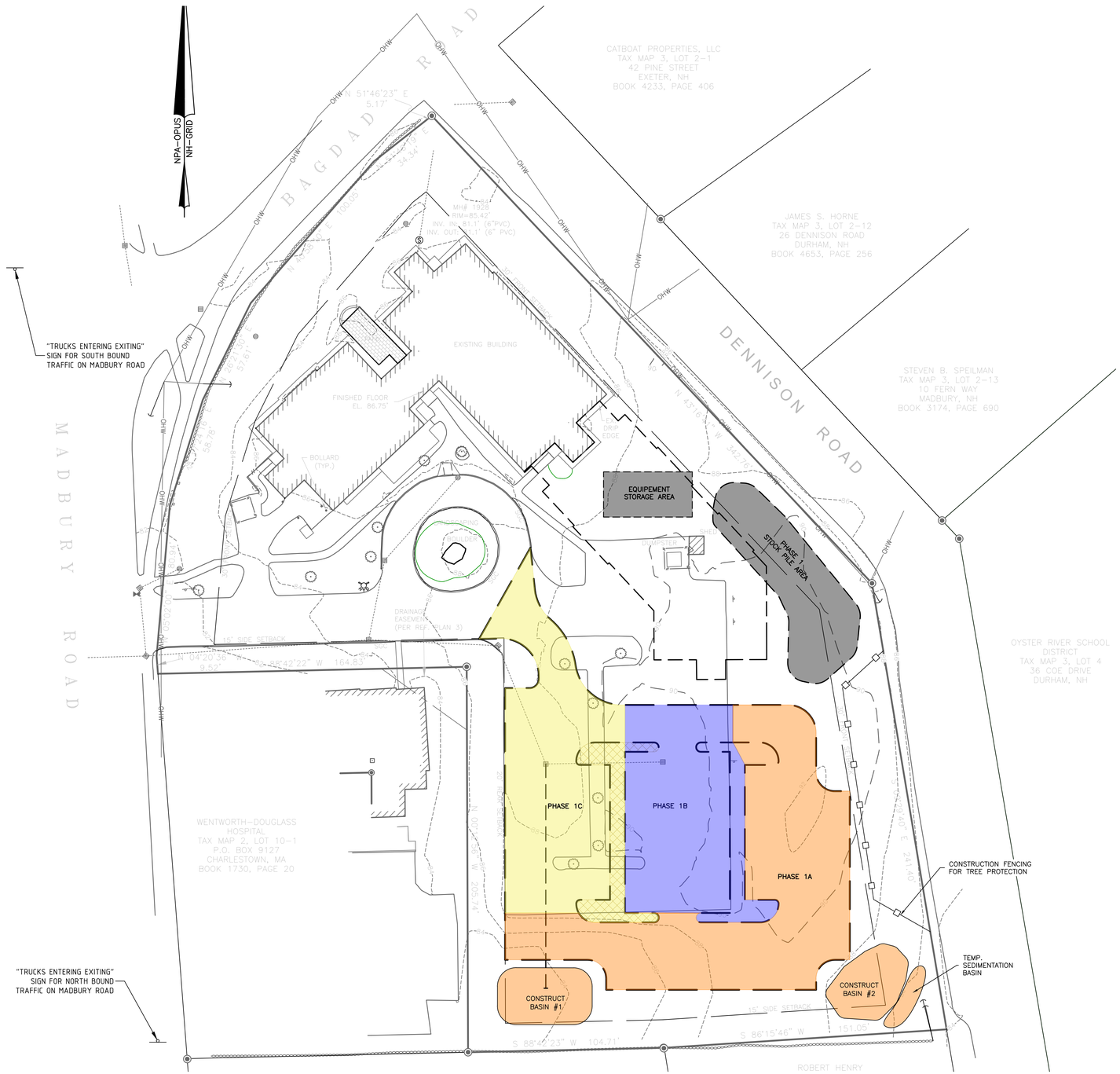

LEGEND	EXISTING
	MONUMENT
	BOUND
	UTILITY POLE
	CATCH BASIN
	CATCH BASIN
	CATCH BASIN
	DRAIN MANHOLE
	SEWER MANHOLE
	FIRE HYDRANT
	WATER SHUTOFF
WV	WATER GATE VALVE
	SIGN
	TEST PIT
N 89°56'30" E 425.61'	PROPERTY LINE
	SETBACK LINE
D	DRAIN LINE
W	WATER LINE
S	SEWER LINE
G	GAS LINE
UE	UNDERGROUND ELECTRIC
OHW	OVERHEAD WIRES
//	FENCE
	STONEWALL
	EDGE OF PAVEMENT

PHASE 2 CONSTRUCTION GENERAL NOTES

1. CONTACT DIG SAFE PRIOR TO ANY CONSTRUCTION ON THE SITE.
2. CONSTRUCTION HOURS SHALL BE MONDAY THROUGH FRIDAY 7:00 AM TO 5:00 PM AND SATURDAY 8:00AM TO 2:00PM
3. CONSTRUCTION DELIVERIES SHALL BE MAD BETWEEN WORKING HOURS ONLY.
4. NO CONSTRUCION DEBRIS SHALL BE STORED ON TOWN PROPERTY.
5. ALL PUBLIC STREETS SHALL BE CLEANED AT THE END OF EACH DAY IF NECESSARY.
6. DUST SHALL BE CONTROLED ON SITE BU USE OF DUST CONTROL MEASURES SUCH AS WATERING.
7. EROSION SHALL BE CONTROLLED BY USING SILT SOXX AT THE PERMIETER OF THE CONSTRUCTION AREA AND SILT SACKS SHALL BE INSTALLED IN CATCH BASINS ON SITE. REFER TO EROSION CONTROL PLAN.

PHASE 2 CONSTRUCTION SEQUENCING

1. THE RESIDENT PARKING AREA IS DESIGNATED AS THE WESTERLY SIDE OF THE PARKING AREA AND THE EASTERLY AND SOUTHERLY PARKING AREA WILL BE USED FOR CONSTRUCTION STAGING, DELIVERIES AND CONSTRUCTION PERSONNEL PARKING.
2. PHASE 2 CONSTRUCTION INCORPORATES THE FULL CONSTRUCTION OF THE BUILDING ADDITION AND ALL SITE AMMENTITIES OTHER THAN THE PARKING LOT COMPLETED IN PHASE 1.
3. INSTALL ALL EROSION CONTROL AS REQURED AND SHOWN ON THE DRAINAGE AND EROSION CONTROL PLAN.
4. CONSTRUCTION TRAFFIC SHALL BE LIMITED TO THE ACCESS ROAD AND CONSTRUCTION PARKING AREA TO THE MAXIMUM EXTENT POSSIBLE. LARGER DELIVERY VEHICLES SHALL USE THE OUTSIDE PARKING LOT ACCESS ROAD FOR SITE CIRCULATION. SMALLER CONSTRUCTION VEHICLES AND CONSTRUCTION PERSONNEL SHALL USE THE SMALLER LOOP IN THE CONSTRUCTION PARKING AREA FOR CIRCULATION.
5. PAVEMENT IN THE OLD PARKING AREA SHALL BE REMOVED AND DICARDED OFF SITE.
6. CLEARING AND GRUBBING FOR THE BUILDING CONSTRUCTION, SITE AMENTIES AND ADDITIONAL STORMWATER COMPONENTS NOT CONSTRUCTED IN PHASE 1.
7. CONSTRUCT ADDITIONAL STORMWATER COMPONENTS AND STABILIZE OR PROVIED TEMPORARY STORMWATER CONTROL.
8. EXCAVATE FOR BUILDING FOUNDATION AND CONSTRUCT FOUNDATION.
9. INSTALL UTILITIES AND PROPERLY BACKFILL IN ACCORDANCE WITH THE STATED CONSTRUCTION STANDARDS ON THE PLANS.
10. STABILIZE SITE IN ACCORDANCE WITH THE SITE STABILIZATION NOTES AND LANDSCAPE PLAN.

NO.	REVISIONS	DATE	INT.
1.	REVISED SITE PLAN AND GRADING	7/2/20	MCS
0.	INITIAL SUBMISSION TO THE DURHAM PLANNING BOARD	6/3/20	MCS

SEAL

DATE ISSUED: 6/3/20
SCALE: 1"=30'
DESIGNED BY: MCS
DRAWN BY: MCS
APPROVED BY: MJS
DWG FILE: 19-057-C103A.dwg

PHASE #1 CONSTRUCTION PLAN

prepared for
BW2 LLC C/O
HOUSING INITIATIVES OF NEW ENGLAND
TAX MAP 2, LOT 10-4
BAGDAD ROAD, DURHAM, NH

MJS ENGINEERING, P.C.
CIVIL • STRUCTURAL • ENVIRONMENTAL
5 KNIGHT STREET, P.O. BOX 369
NEWMARKET, NH 03857
PHONE: (603) 659-4979, FAX: (603) 659-4627
E-MAIL: MJS@MJS-ENGINEERING.COM

JOB: 19-057

C103

C:\Users\Max\Documents\mjs\projects\2019\19057\internal\dwg\19057 CivilE-Construction Phasing Plan.dwg
2020-07-02

FINAL APPROVAL BY DURHAM PLANNING BOARD.
CERTIFIED BY MICHAEL BEHRENDT, TOWN PLANNER
CERTIFIED ____________________
DATE ____________________

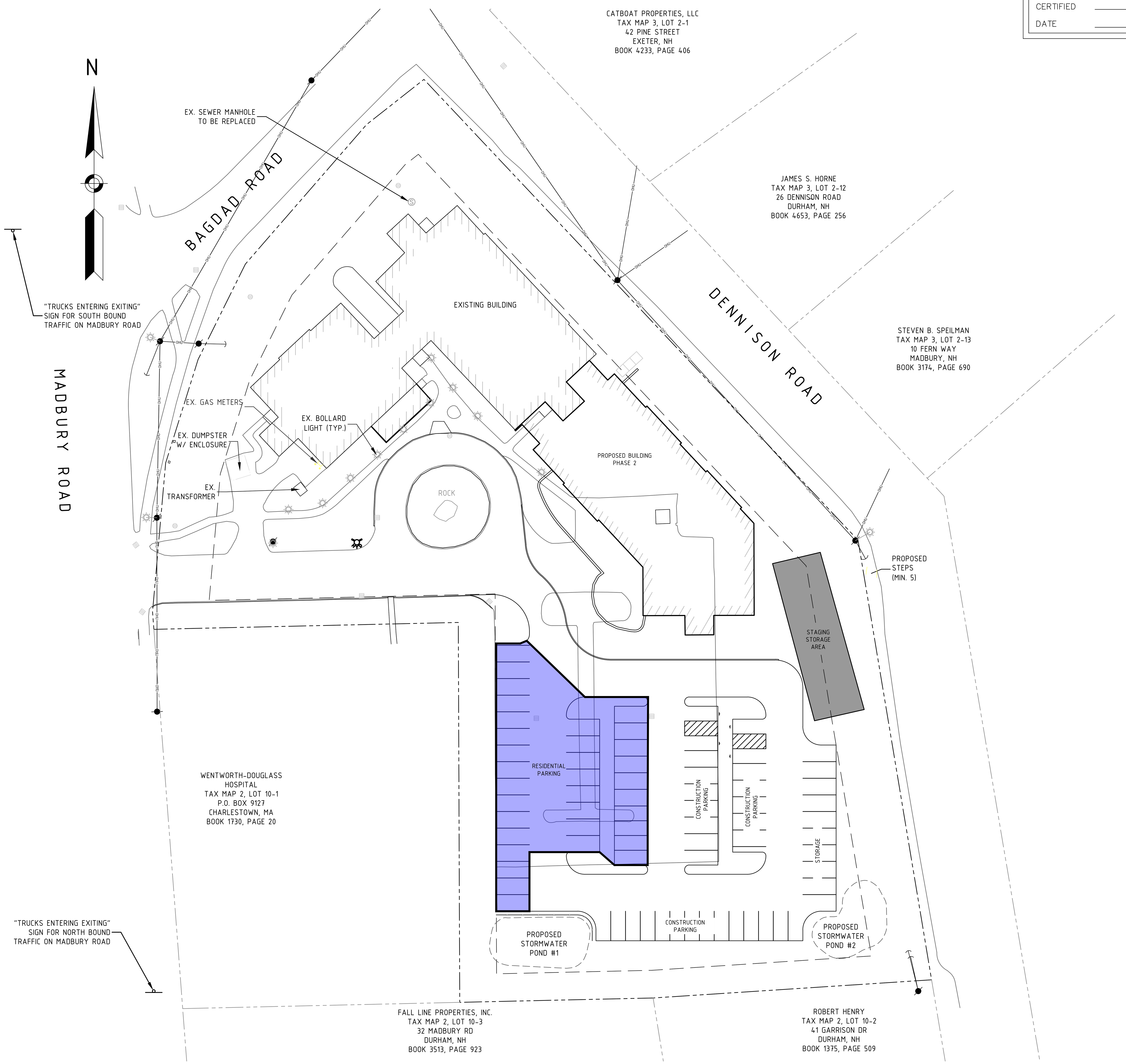

LOCUS MAP
SCALE 1:12 000

PHASE 1 CONSTRUCTION GENERAL NOTES

1. CONTACT DIG SAFE PRIOR TO ANY CONSTRUCTION ON THE SITE.
2. CONSTRUCTION HOURS SHALL BE MONDAY THROUGH FRIDAY 7:00 AM TO 5:00 PM AND SATURDAY 8:00AM TO 2:00PM
3. CONSTRUCTION DELIVERIES SHALL BE MAD BETWEEN WORKING HOURS ONLY.
4. NO CONSTRUCION DEBRIS SHALL BE STORED ON TOWN PROPERTY.
5. ALL PUBLIC STREETS SHALL BE CLEANED AT THE END OF EACH DAY IF NECESSARY.
6. DUST SHALL BE CONTROLED ON SITE BU USE OF DUST CONTROL MEASURES SUCH AS WATERING.
7. EROSION SHALL BE CONTROLLED BY USING SILT SOXX AT THE PERMIETER OF THE CONSTRUCTION AREA AND SILT SACKS SHALL BE INSTALLED IN CATCH BASINS ON SITE. REFER TO EROSION CONTROL PLAN.

PHASE 1 CONSTRUCTION SEQUENCING

1. PHASE 1 CONSTRUCTION INCLUDES ONLY THE CONSTRUCTION OF THE PARKING LOT AND PART OF THE STORMWATER MANAGEMENT SYSTEM.
2. INSTALL ALL EROSION CONTROL AS REQURED AND SHOWN ON THE DRAINAGE AND EROSION CONTROL PLAN.
3. CLEAR AND GRUB THE EXPANDED PARKING AREA AND STORMWATER PONDS 1 & 2.
4. CONSTRUCT STORMWATER POND 1, OUTLET AND TEMPORARY SEDIMENT BASIN NEAR STORMWATER POND 2.
5. EXCAVATE, FILL, COMPACT AND CONSTRUCT THE EXPANDED PART OF THE PARKING LOT SHOWN AS PHASE 1 TO THE LINE AND GRADE SHOWN ON THE SITE PLAN.
6. COMPLETE THE CONSTRUCTION OF STORMWATER POND 2, AND INSTALL BASE PAVEMENT COURSE TO NEW PARKING AREA.
7. DURING CONSTRUCTION OF EXPANDED PARKING LOT, ALL RESIDENT PARKING SHALL BE LIMITED TO THE THREE SPOTS ON THE NORTH SIDE OF THE PARKING LOT AND ALL OF THE WEST SIDE.
8. ONCE THE NEW PARKING AREA IS COMPLETE, SHIFT ALL RESIDENT PARKING TO THE NEWLY CONSTRUCTED 31 SPACES
9. RECONSTRUCT MIDDLE PARKING AREA SHOWN AS PHASE 1B TO THE ISLAND.
10. SHIFT RESIDENT PARKING IN FIRST ROW UP TO MIDDLE SECTION AND CONSTRUCT FINAL PARKING PHASE 1C.
11. ONCE FINAL GRADE OF PARKING AREA IS COMPLETE, BASE PAVE ENTIRE LOT FOR RESIDENT AND CONSTRUCTION PARKING FOR PHASE 2.
12. EXCAVATE FOR BUILDING FOUNDATION AND CONSTRUCT FOUNDATION.
13. STABILIZE ALL OTHER DISTURBED AREAS IN ACCORDANCE WITH SITE STABILIZATION NOTES.

0 30 60 100
SCALE: 1" = 30'

NO.	REVISIONS	DATE	INT.
1.	REVISED SITE PLAN AND GRADING	7/2/20	MCS
0.	INITIAL SUBMISSION TO THE DURHAM PLANNING BOARD	6/3/20	MCS

SEAL

DATE ISSUED:	6/3/20
SCALE:	1"=30'
DESIGNED BY:	MCS
DRAWN BY:	MCS
APPROVED BY:	MJS
DWG FILE:	19057 CivilE-Construction Phasing Plan.dwg

PHASE #2 CONSTRUCTION PLAN

prepared for
BW2 LLC C/O
HOUSING INITIATIVES OF NEW ENGLAND
TAX MAP 2. LOT 10-4
BAGDAD ROAD, DURHAM, NH

MJS ENGINEERING, P.C.
CIVIL • STRUCTURAL • ENVIRONMENTAL
5 Railroad St., P.O. Box 359
Newmarket, NH 03857
Phone: (603) 659-4979, Fax: (603) 659-4627
E-mail: mjs@mjs-engineering.com

JOB: 19-057

C104

FINAL APPROVAL BY DURHAM PLANNING BOARD.
CERTIFIED BY MICHAEL BEHRENDT, TOWN PLANNER
CERTIFIED ____________________
DATE ____________________

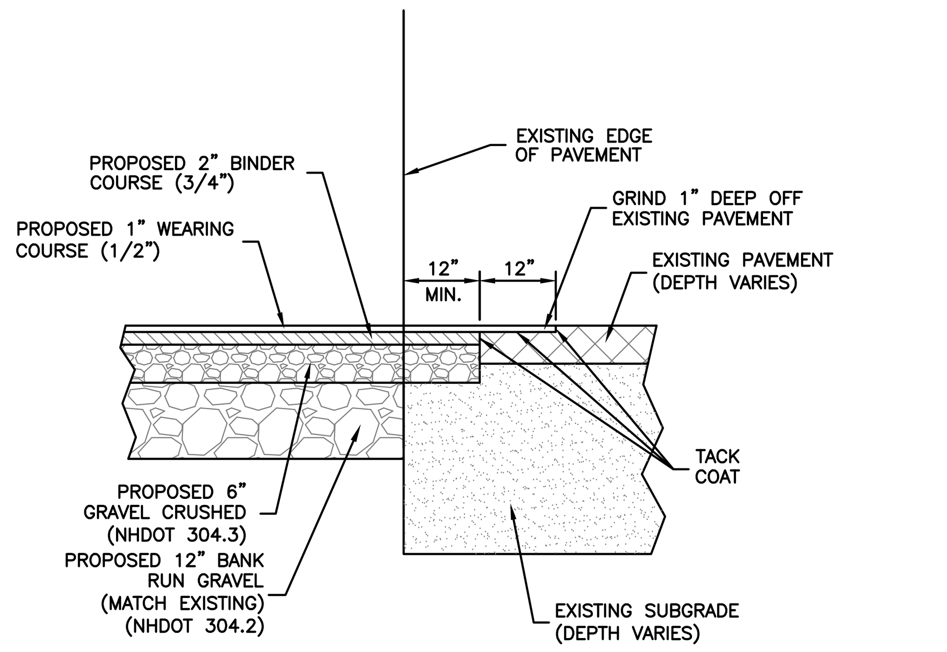

TYPICAL PAVEMENT SAWCUT DETAIL

N.T.S

PAVEMENT SAWCUT NOTES:

1. SAWCUT THROUGH DEPTH OF PAVEMENT AT LEAST 1 FT. FROM EDGE OR GREATER IF REQUIRED BY NHDOT.
2. INSTALL AND COMPACT CRUSHED GRAVEL TO GRADE.
3. PLACE BINDER COURSE.
4. GRIND EXISTING PAVEMENT 1 FT. WIDE TO A DEPTH NECESSARY TO PROPERLY MATCH NEW WEARING COURSE PAVEMENT.
5. TACK COAT ALL EXISTING PAVEMENT SURFACES WITH EMULSIFIED ASPHALT (MS-1) PRIOR TO PLACING NEW PAVEMENT.

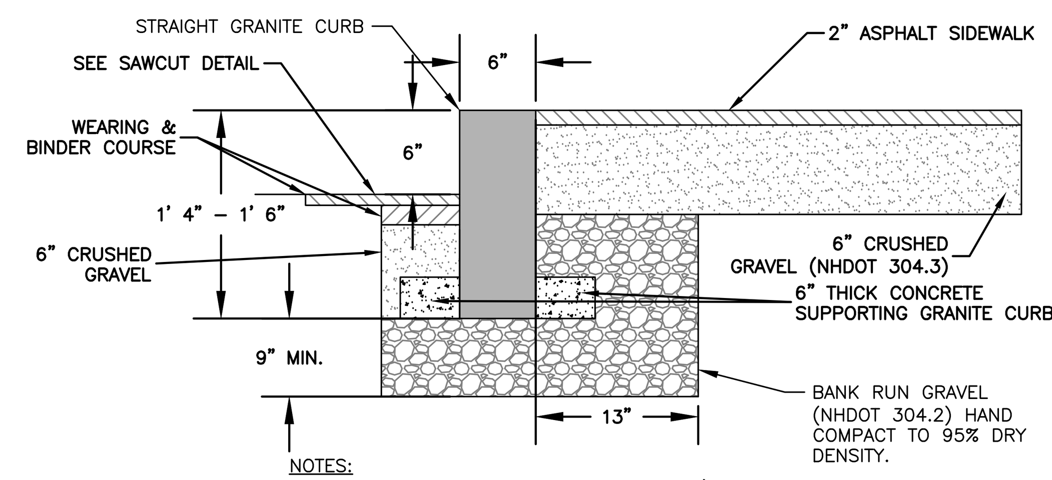

NOTES:
1. MINIMUM LENGTH OF CURB STONES = 3'
2. MAXIMUM LENGTH OF CURB STONES = 10'
3. ADJOINING STONES SHALL HAVE THE SAME OR APPROXIMATELY THE SAME LENGTH.

ASPHALT SIDEWALK WITH VERTICAL GRANITE CURB

N.T.S

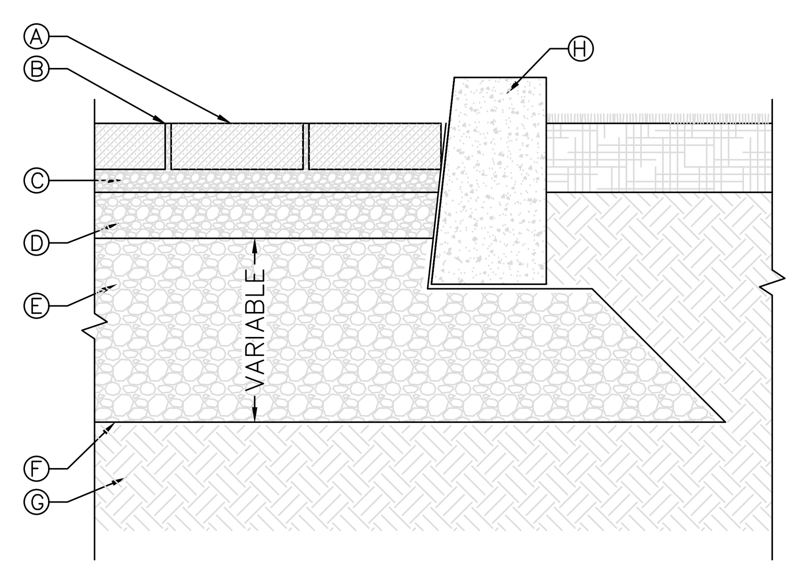

SECTION
CASE NO 1 – FULL INFILTRATION

LEGEND:
A PERMEABLE PAVER FROM TECHO-BLOC, 2 3/8" TO 3 15/16" (60 TO 100 MM) THICK INFLO, MISTA RANDOM, PURE, VICTORIEN PERMEABLE, VILLAGIO OR VILLAGIO GRANDE CONFORMING TO ASTM C 936
B JOINT FILLING MATERIAL, NO. 8 (FOR INFLO, PURE AND VILLAGIO) OR NO. 9 STONE (FOR MISTA RANDOM, VICTORIEN PERMEABLE AND VILLAGIO GRANDE) CONFORMING TO ASTM D 448
C BEDDING COURSE, 2" (50 MM) THICK NO. 8 STONE CONFORMING TO ASTM D 448
D BASE COURSE, 4" (100 MM) THICK NO. 57 STONE CONFORMING TO ASTM D 448
E SUBBASE COURSE, THICKNESS AS PER DESIGN NO. 2 STONE CONFORMING TO ASTM D 448
F GEOTEXTILE
G SUBGRADE
H EDGE RESTRAINT

TECHO PERMEABLE PAVERS

N.T.S

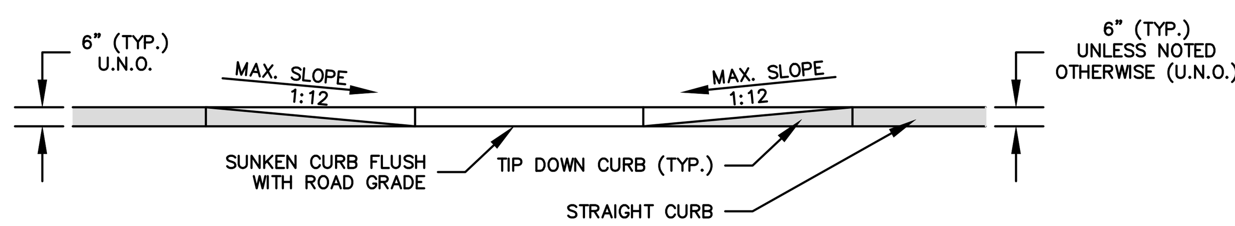

PROFILE VIEW

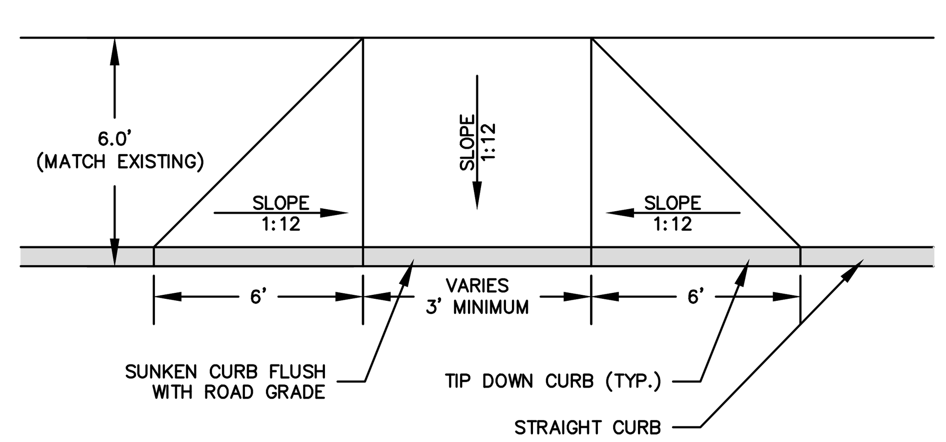

PLAN VIEW

NOTES:
1. SEE SIDEWALK CONSTRUCTION DETAILS.

HANDICAP ACCESSIBLE RAMP

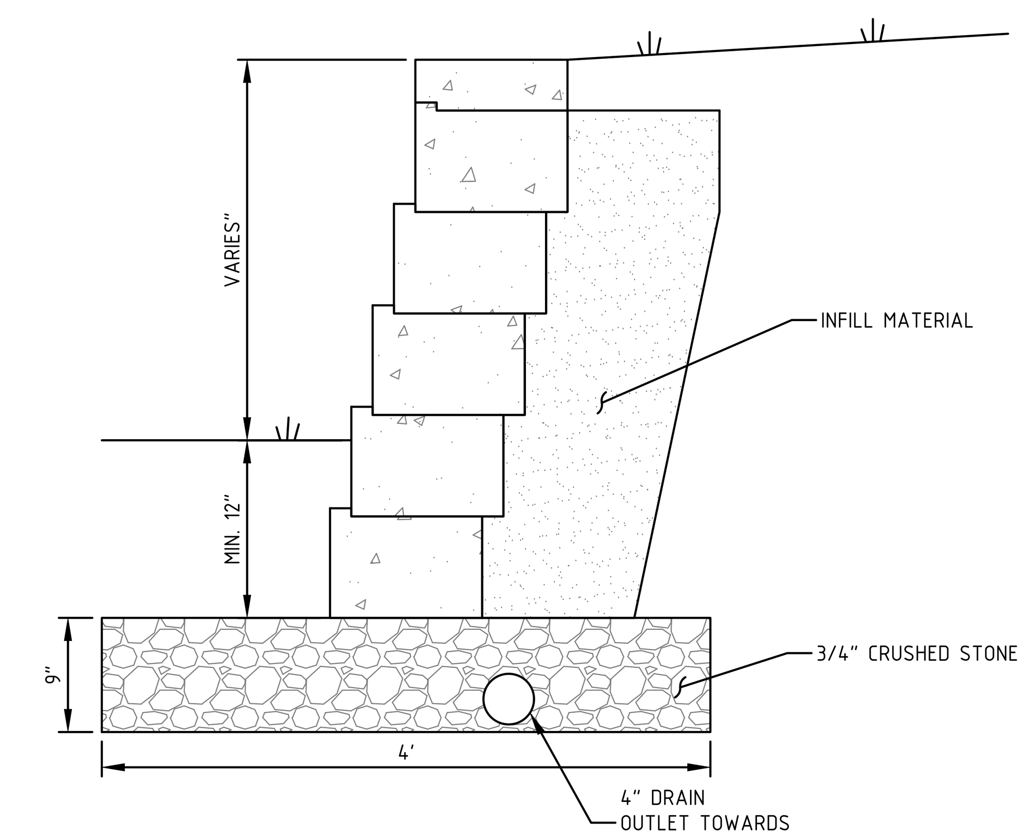

TYPICAL PRECAST BLOCK WALL DETAIL

N.T.S.

NO.	REVISIONS	DATE	INT.
1.	REVISED SITE PLAN AND GRADING	7/2/20	MCS
0.	INITIAL SUBMISSION TO THE DURHAM PLANNING BOARD	6/3/20	MCS

SEAL

DATE ISSUED: 6/3/20
SCALE: 1"=30'
DESIGNED BY: MCS
DRAWN BY: MCS
APPROVED BY: MJS
DWG FILE: 19057 DetIC.dwg

CONSTRUCTION DETAILS
prepared for
BW2 LLC C/O
HOUSING INITIATIVES OF NEW ENGLAND
TAX MAP 2, LOT 10-4
BAGDAD ROAD, DURHAM, NH

MJS ENGINEERING, P.C.
CIVIL • STRUCTURAL • ENVIRONMENTAL
5 RAILROAD ST., P.O. BOX 359
NEWMARKET, NH 03857
PHONE: (603) 659-4979, FAX: (603) 659-4627
E-MAIL: MJS@MJS-ENGINEERING.COM

JOB: 19-057

D504

C:\Users\Max\Documents\mjs\projects\2019\19057\internal\dwg\19057 DetIC.dwg
2020-07-02 12:07 pm